NAME: HOSPITAL
LOCATION: AL JUBAIL/SA

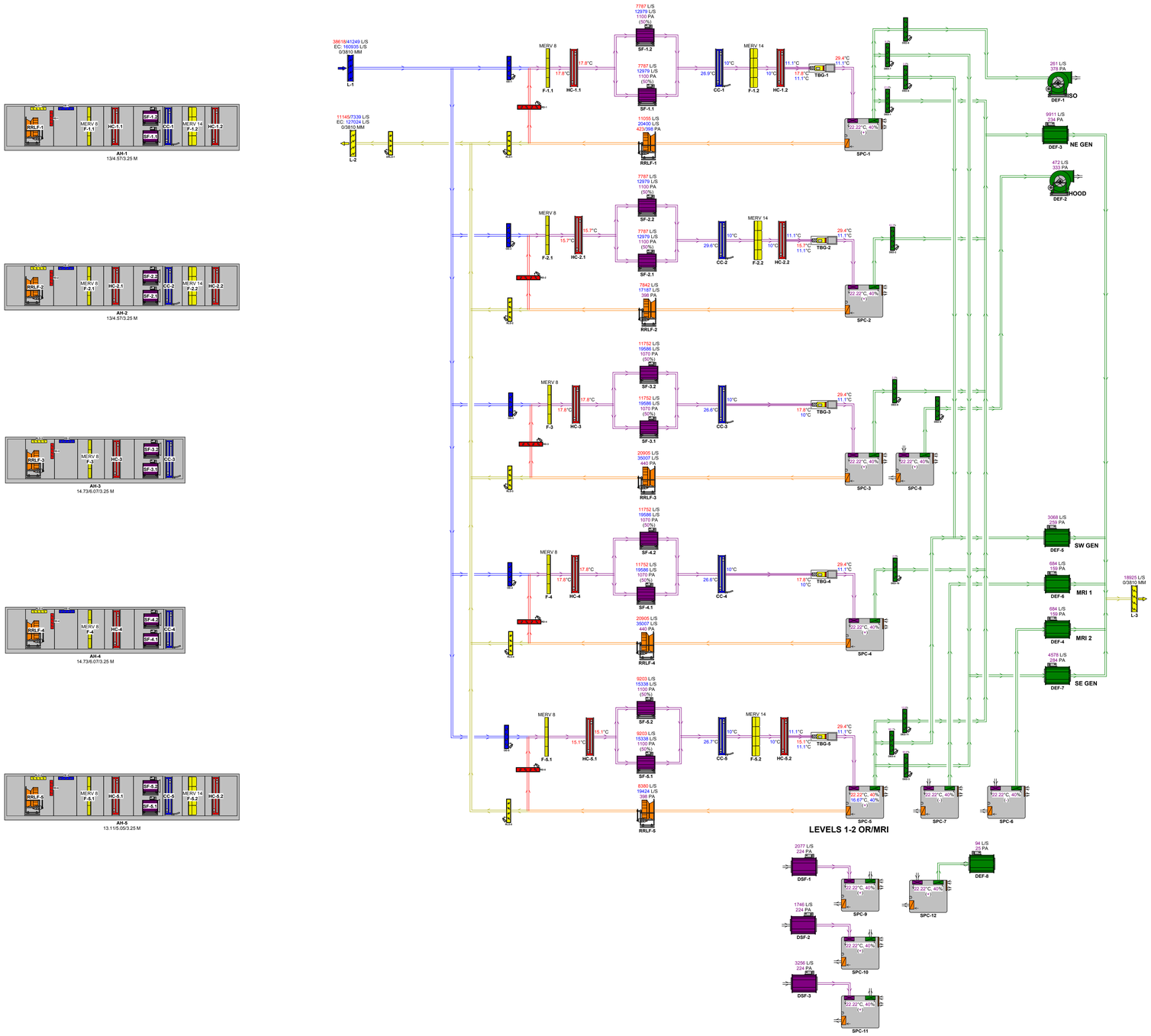

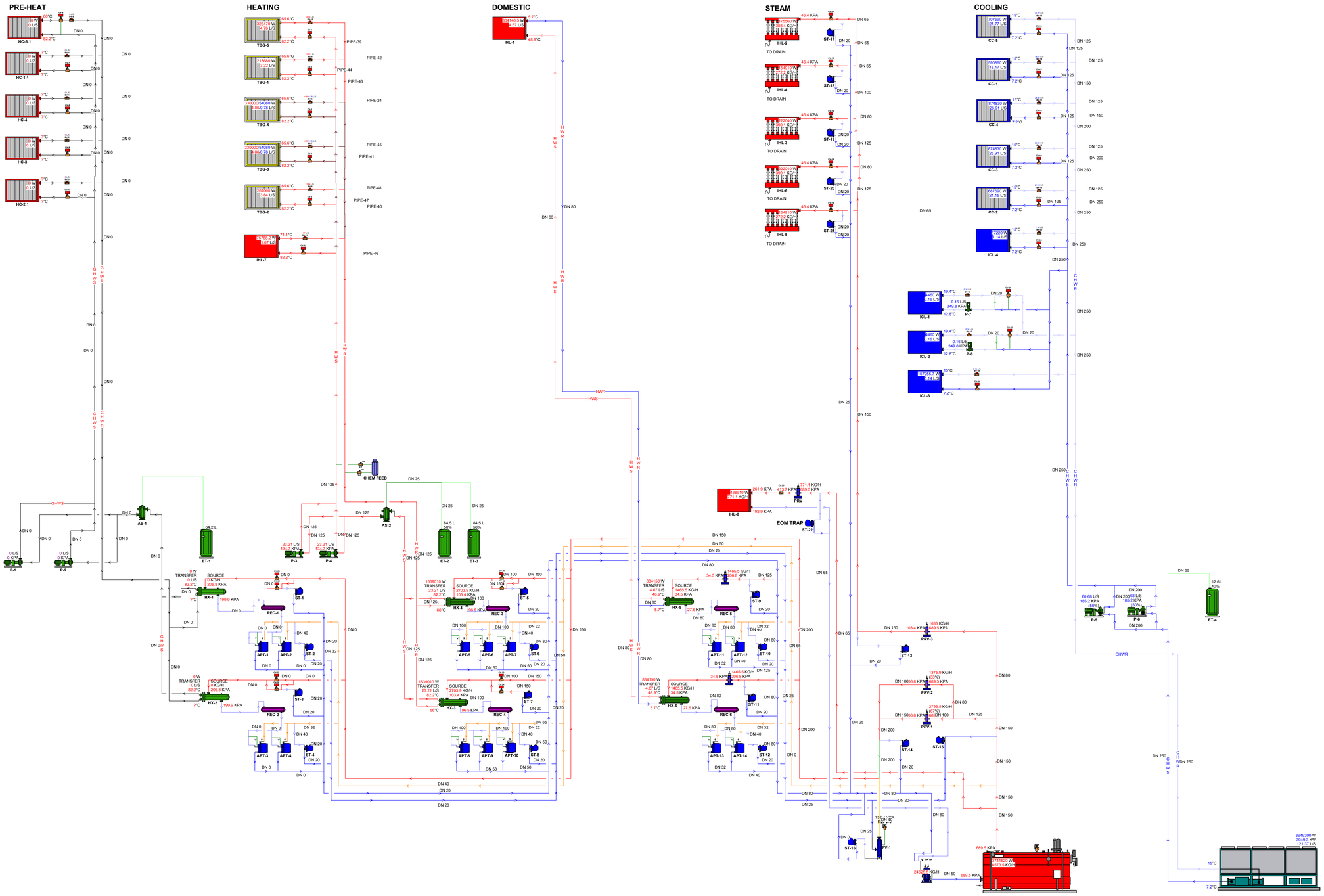
PRE-HEAT
HEATING
DOMESTIC
STEAM
COOLING
HC-5.1
HC-1.1
HC-4
HC-3
HC-2.1
TBG-5
TBG-1
TBG-4
TBG-3
TBG-2
IHL-7
IHL-1
IHL-2
IHL-4
IHL-3
IHL-6
IHL-5
IHL-8
CC-5
CC-1
CC-4
CC-3
CC-2
ICL-4
ICL-1
ICL-2
ICL-3
GHWS
GHWR
HWS
HWR
CHWS
CHWR
CHEM FEED
AS-1
AS-2
ET-1
ET-2
ET-3
ET-4
P-1
P-2
P-3
P-4
P-5
P-6
P-7
P-8
HX-1
HX-2
HX-3
HX-4
HX-5
HX-6
REC-1
REC-2
REC-3
REC-4
REC-5
REC-6
APT-1
APT-2
APT-3
APT-4
APT-5
APT-6
APT-7
APT-8
APT-9
APT-10
APT-11
APT-12
APT-13
APT-14
ST-1
ST-2
ST-3
ST-4
ST-5
ST-6
ST-7
ST-8
ST-9
ST-10
ST-11
ST-12
ST-13
ST-14
ST-15
ST-16
ST-17
ST-18
ST-19
ST-20
ST-21
ST-22
PRV
PRV-1
PRV-2
PRV-3
EOM TRAP
TO DRAIN
PIPE-39
PIPE-42
PIPE-44
PIPE-43
PIPE-24
PIPE-45
PIPE-41
PIPE-48
PIPE-47
PIPE-40
PIPE-46
374 1520 W
573.5 KG/H
3949300 W
3949.3 KW
12 37 L/S